SHAFTING AND STERN TUBE

FOR No 586
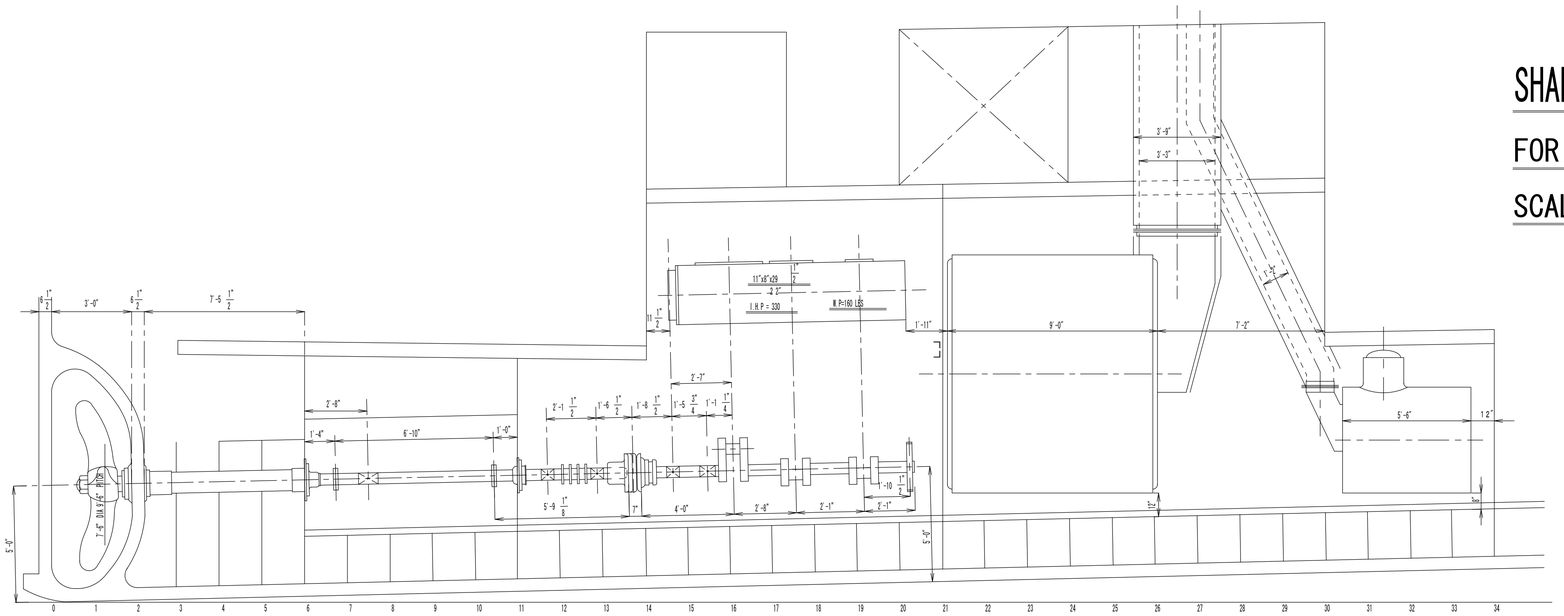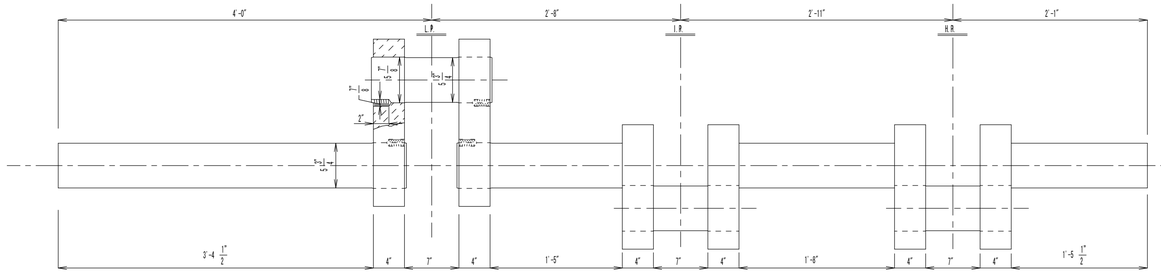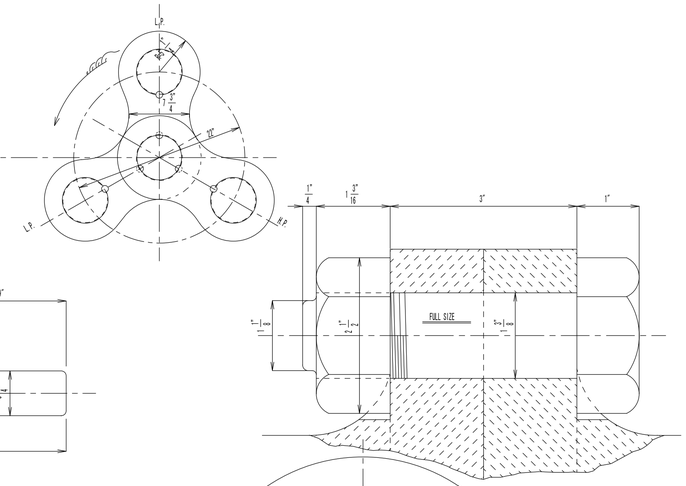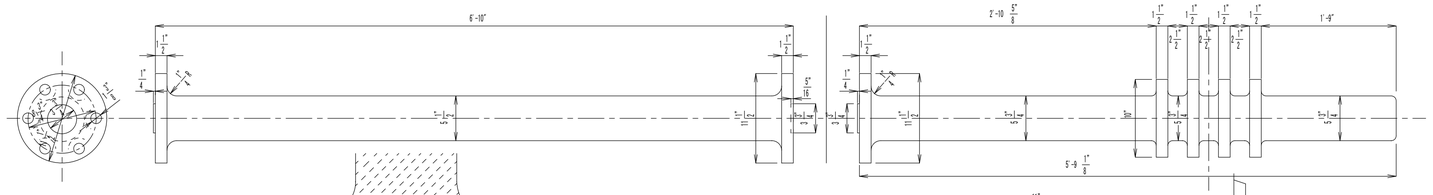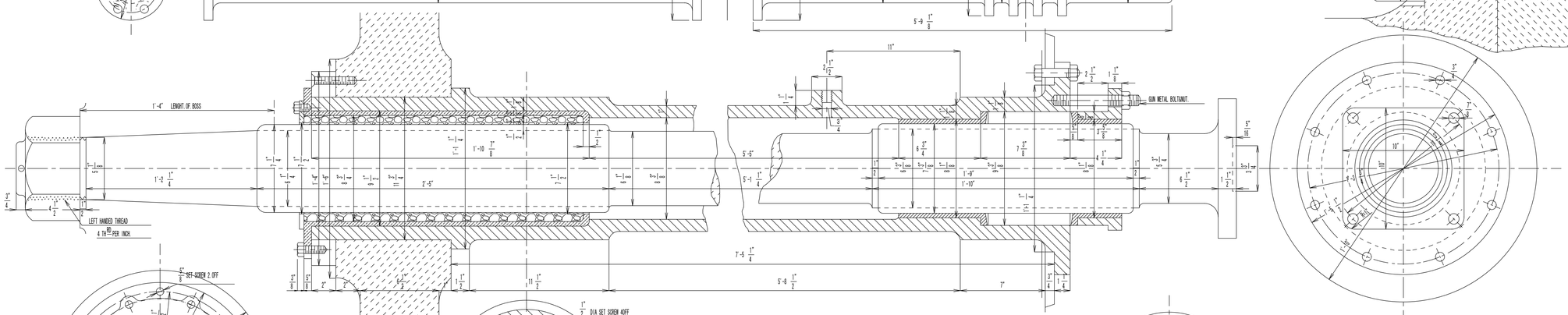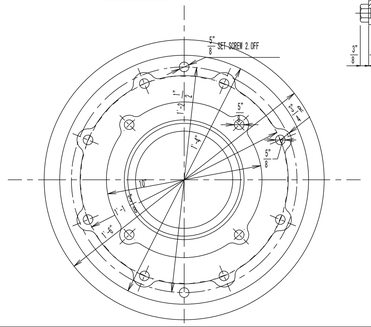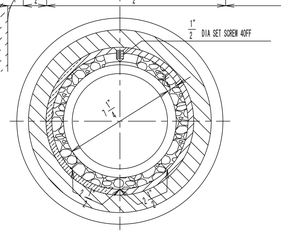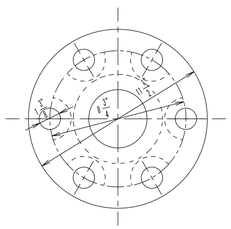
SCALE 3 11/2 3/8 IN TO ONE FT