DKY. PUMP SEA VALVE

FOR No 5 8 6
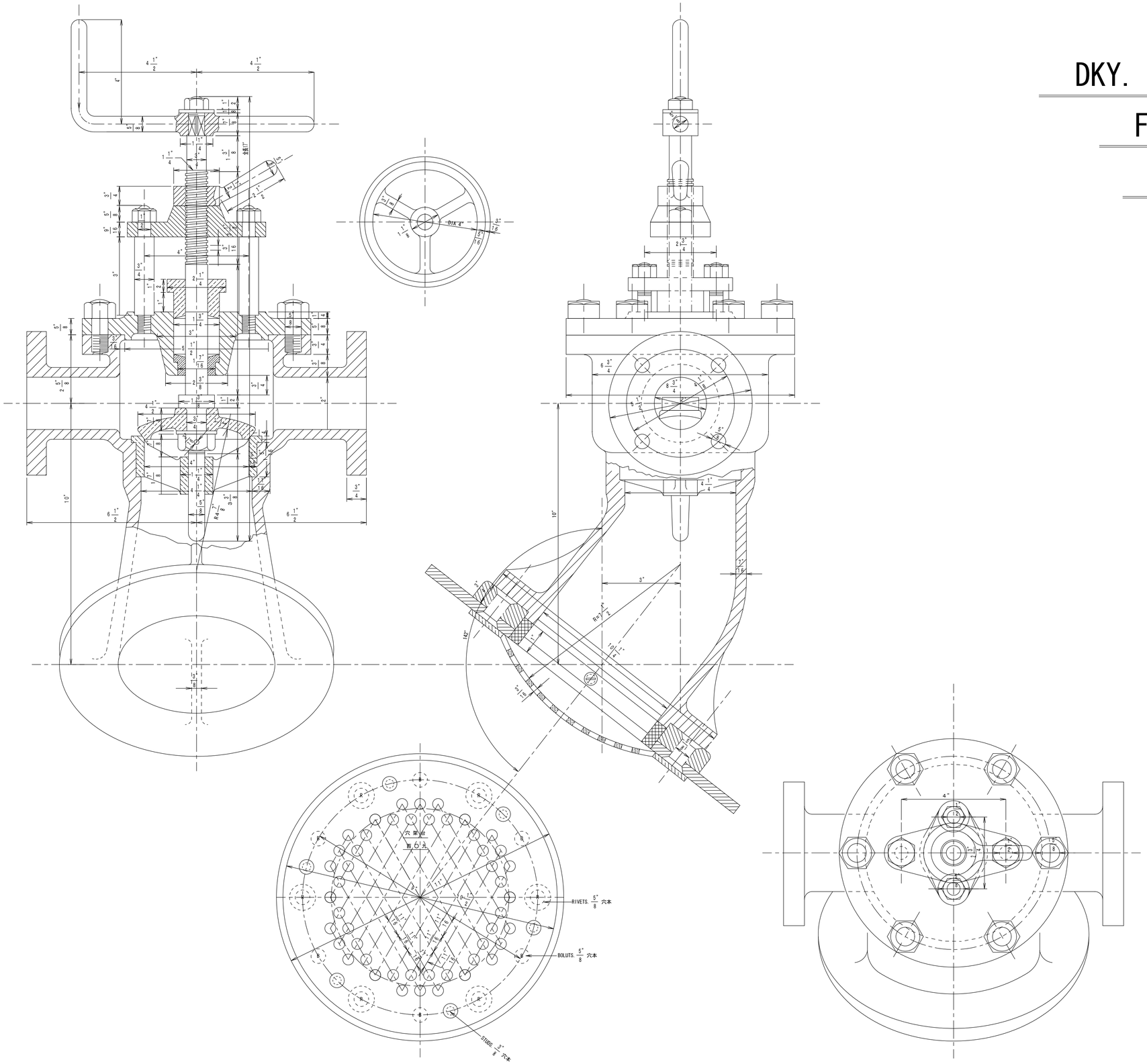
HALF SIZE