MAIN BOILER FOR NO 586

W. P=160 LBS PER □ ″

SCALE 1 INTO ON ONE FT.
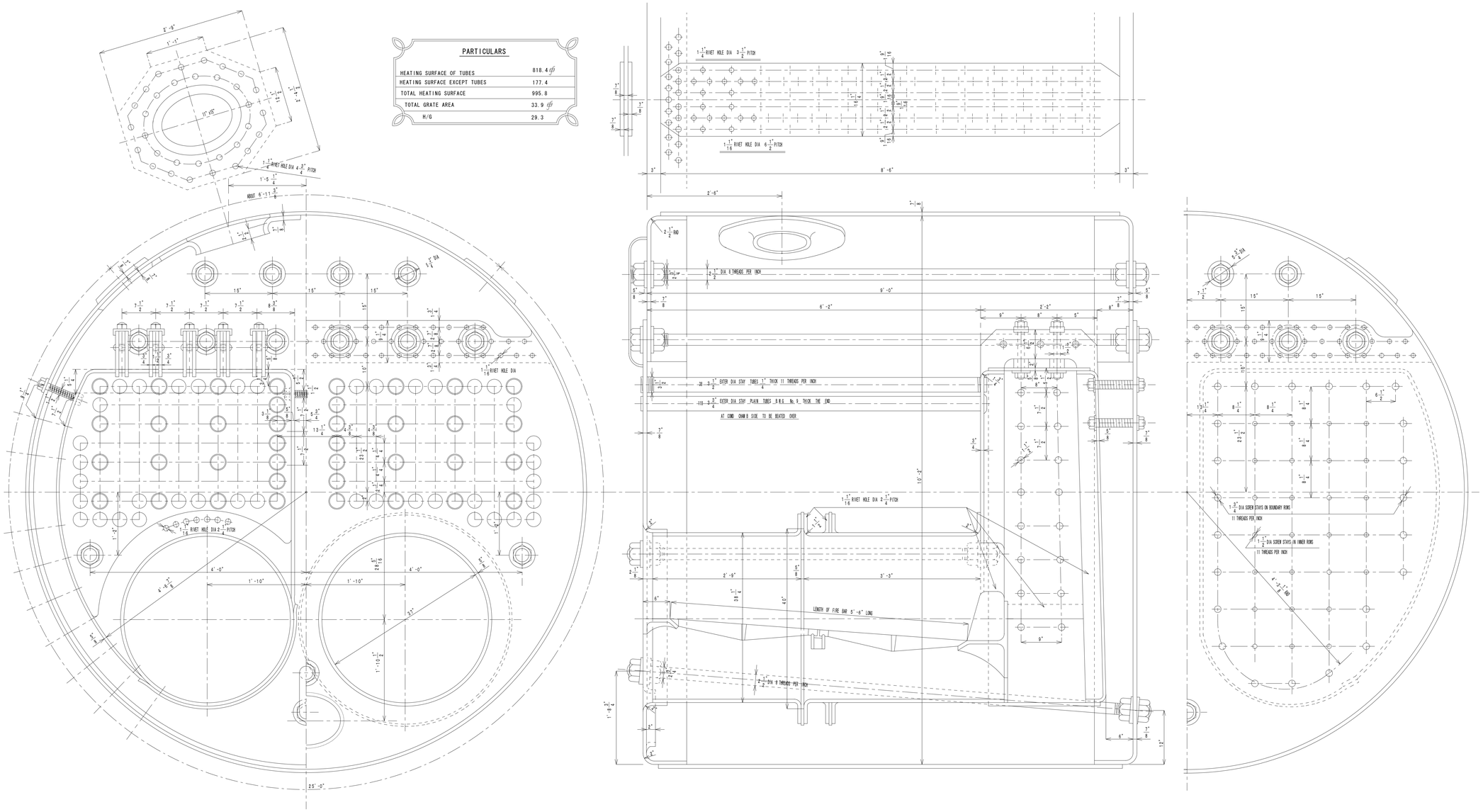
PARTICULARS	
HEATING SURFACE OF TUBES	818.4 ㎡
HEATING SURFACE EXCEPT TUBES	177.4
TOTAL HEATING SURFACE	995.8
TOTAL GRATE AREA	33.9 ㎡
H/G	29.3