MAIN BOILDER SAFETY VALVE

FOR No. 586
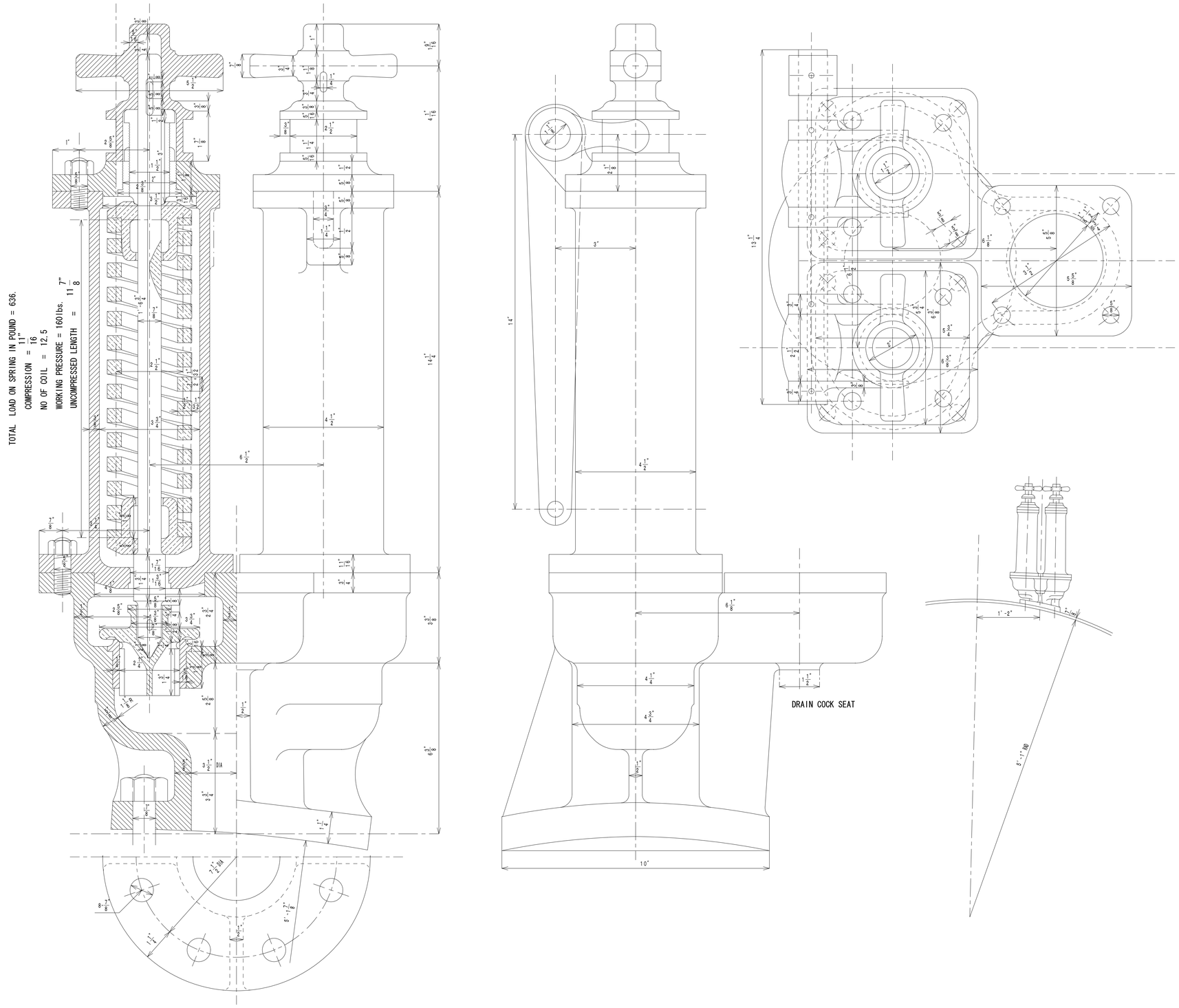
SCALE 6 IN. TO ONE FT.