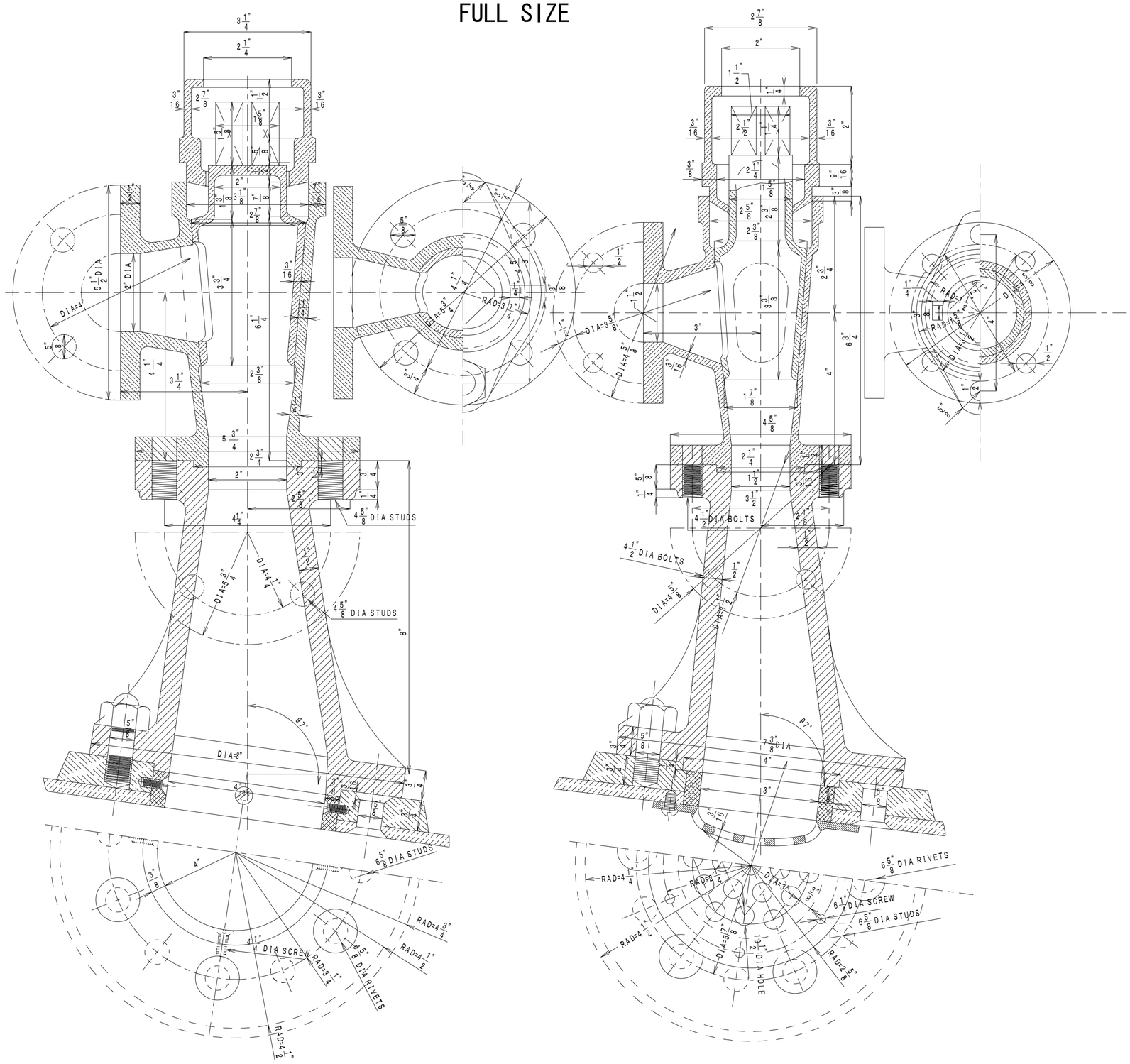BLOW AND SEA COCK FOR CALLEY
FOR NO 586
FULL SIZE